Type QT

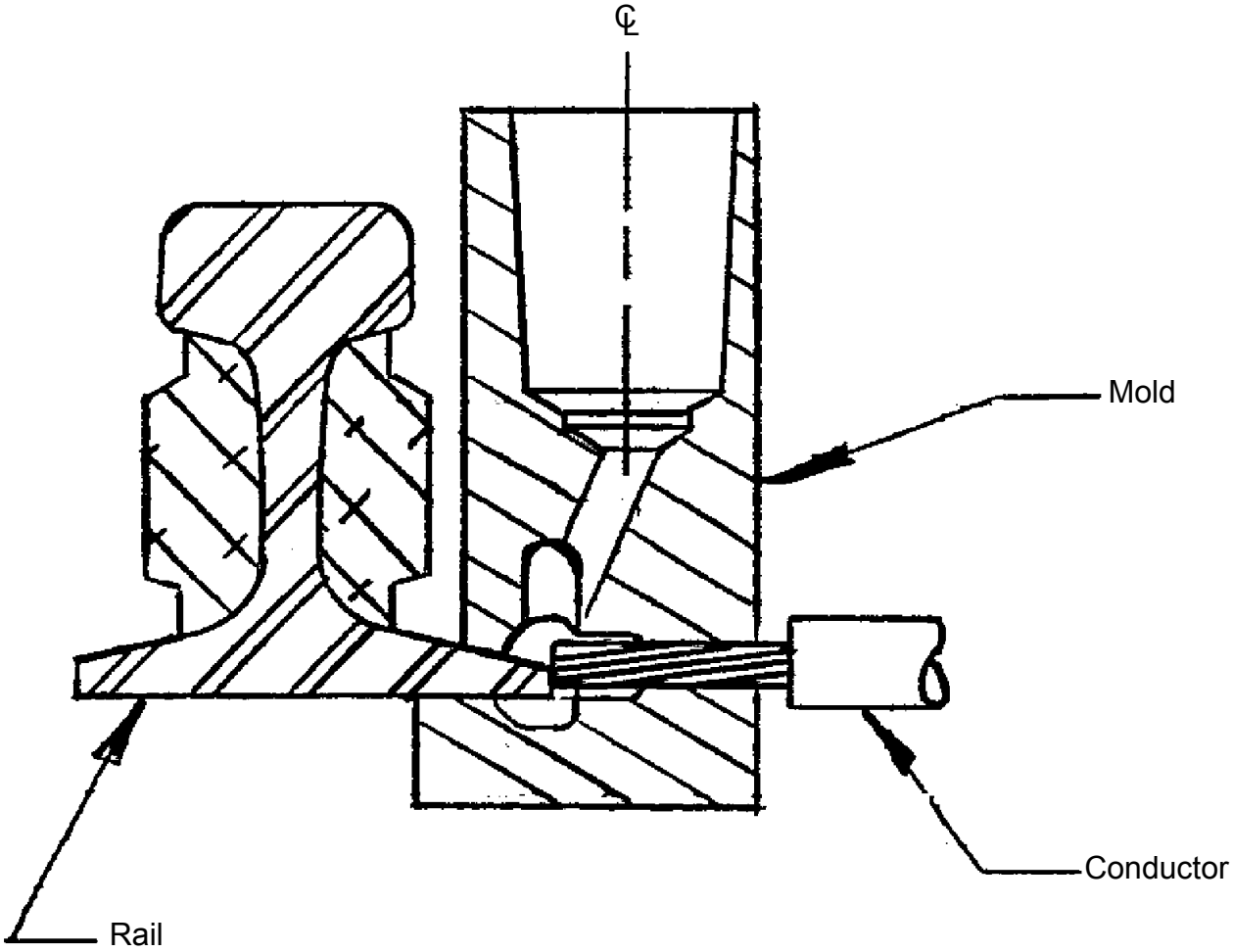

Prior to making a connection, read and follow the full instruction sheet IPRF, the full instruction sheet shipped with CADWELD® (IPX), and special instructions below.

1. Place cable in mold and lock "E-Z" clamp.
2. Position mold on rail.
3. Hold mold up against rail.

Note: If conductor is insulated, strip 2.25” [57 mm] back from end of conductor.

WARNING:
1. ERICO products shall be installed and used only as indicated in ERICO product instruction sheets and training materials. Instruction sheets are available at www.erico.com and from your ERICO customer service representative.
2. ERICO products must never be used for a purpose other than the purpose for which they were designed or in a manner that exceeds specified load ratings.
3. All instructions must be completely followed to ensure proper and safe installation and performance.
4. Improper installation, misuse, misapplication or other failure to completely follow ERICO's instructions and warnings may cause product malfunction, property damage, serious bodily injury and death.

SAFETY INSTRUCTIONS:
All governing codes and regulations and those required by the job site must be observed.
Always use appropriate safety equipment such as eye protection, hard hat, and gloves as appropriate to the application.

CADDY, CADWELD, CRITEC, ERICO, ERIFLEX, ERITECH, and LENTON are registered trademarks of ERICO International Corporation.

© 1995, 2012, 2013
ERICO International Corporation